Docusign Envelope ID: E7BC665A-438E-83FF-832F-C42A06225FE7

1:1



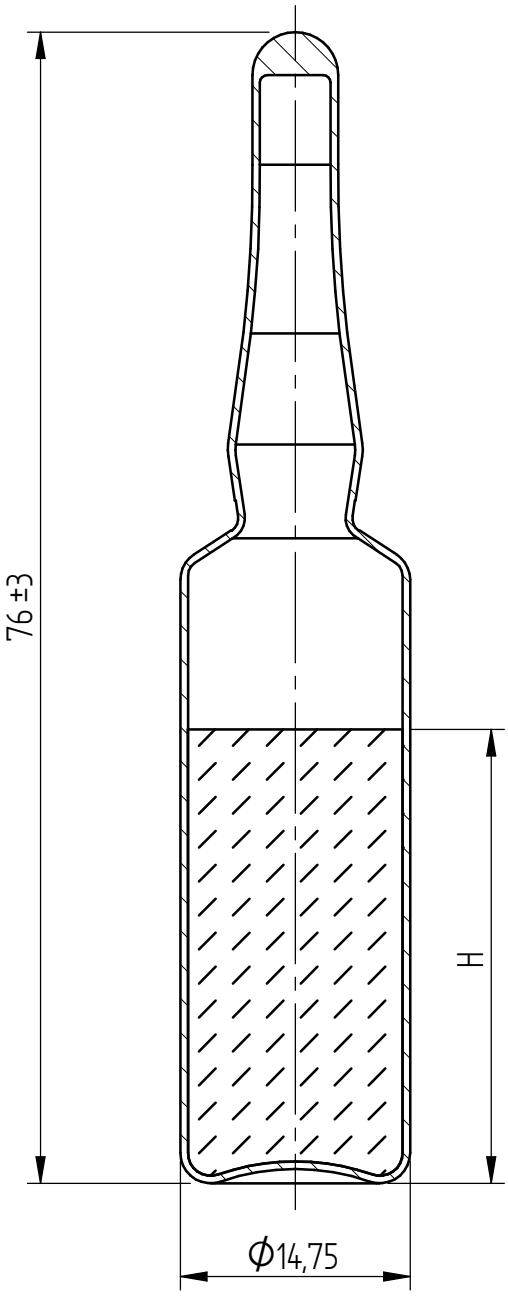

the filling height H
depends on the
active volume

Scale	Tolerance	Surface	Material
2:1	ISO 2768-m		fiolax glass

Nuclide	Document	Responsible Dept.	Drawn	Creation Date	Approval
various nuclides	Verkaufszeichnung	isotrak	DStapper	23.09.2026	DocuSigned by: 98FEBBD5F33F4DA...

Issue Date
Oktober 19, 2026 | 10:26:43 AM MESZ

Eckert & Ziegler

Reference Ampoule
max. 5ml

VZ-4443-001

Rev. A | Sheet 1/1

EDV No.: \\srv-bsfile\Data2\Engineering\public\Exchange\Zeichnungen\7_VERKAUF, FERTIGUNG\4251-4500\Verkaufszeichnung\VZ-4443-001-A.dft

The contents of this drawing and its enclosures are our property. The drawing and its enclosures may not be duplicated without our written approval not be made accessible to any third party. And unauthorised usage is unlawful and will be prosecuted.